Q - SERIES

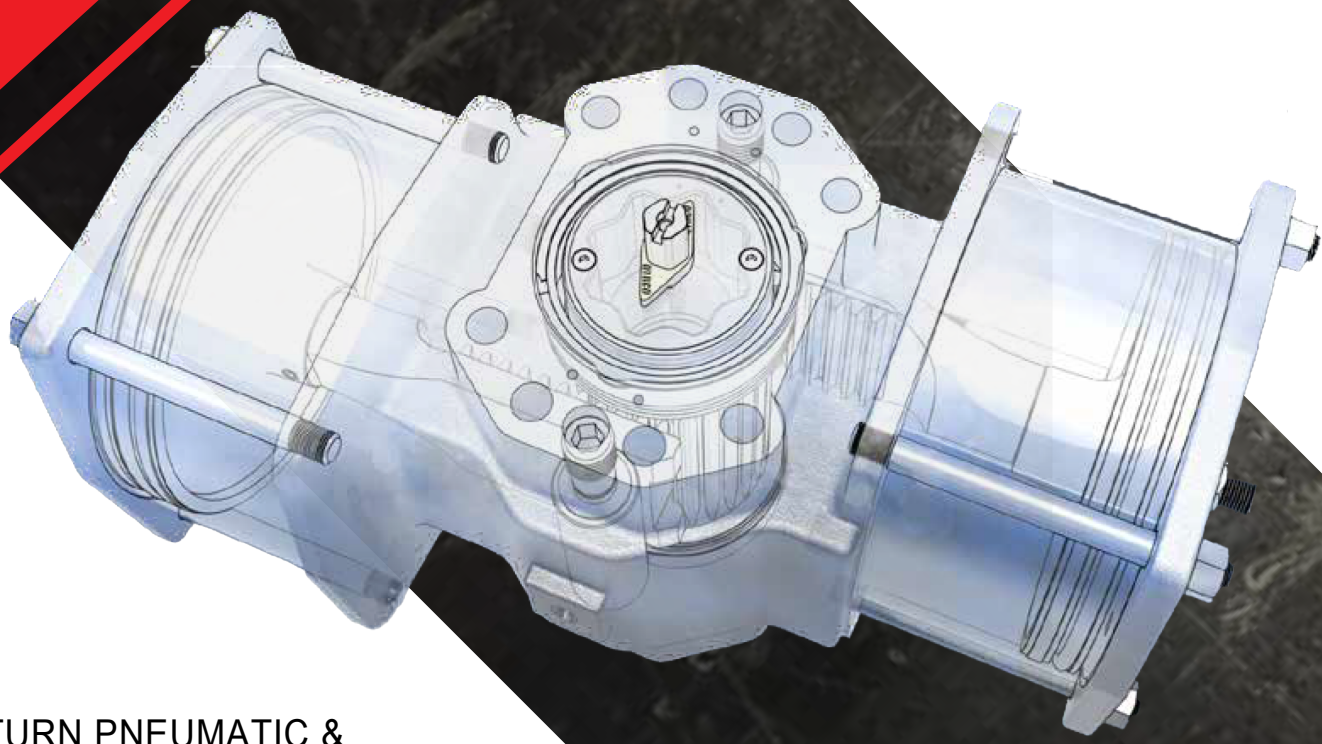

QUARTER-TURN PNEUMATIC &
FLUID POWER ACTUATOR –
PRODUCT BULLETIN

Output Torques to 21,000 in-lb (2373 Nm) Temperatures from -76ºF to 450ºF (-60ºC to 232ºC)	Ductile Iron or Stainless Steel Construction Double-Acting and Spring-Return Models

HIGH CYYCLE LIFE, HIGH SPEED, HIGH RELIABILITY

The Leader in Actuator Technology

QTRCO

Q SERIES PRODUCT BULLETIN REVISION LOG

DCN00650(11)

Date	Modifications
August 2015	Complete update of design & data
March 2016	Updates to materials of construction
October 2016	Incorporate Hydraulic Operation
November 2016	Environmental Ingress Protection

TABLE OF CONTENTS

OPERATION AND PIPING P5

DIMENSIONS AND TECHNICAL DATA P6

PRESSURE EQUIPMENT DIRECTIVE CATEGORY CLASSIFICATION P12

TORQUE DATA P13

PARTS DIAGRAM & MATERIALS OF CONSTRUCTION P18

ENGINEERING STRING P19

OPERATION AND PIPING

Q2 series actuators may be operated with instrument air, hydraulic fluid, water, or other power gases and fluids. Always ensure that the materials of construction are compatible with the application and that the pressure does not exceed the maximum allowable.

Environmental Ingress Protection (Submerged Service)

Q2-Series actuators are capable of achieving IP67 and IP68 ratings for continuous immersion up to a depth of 10 meters. Double acting versions may achieve the rating by tubing in the normal manner. For spring return actuators, the IP67 and IP68 rating may be achieved by one of three methods:

1. The actuator breather port may be fitted with a filter or strainer, allowing fluid to enter the actuator body. This method may only be used if the submersion fluid is compatible with the actuator materials of construction and lubricants. Because the fluid will not adversely affect actuator operation, IP68 requirements will still be met. This method may reduce stroke speed depending on the flow capacity of the filter.
2. The actuator breather port may be plugged using appropriate thread sealant.This method may slightly reduce air torque output due to compression of the air trapped in the actuator body.
3. The actuator breather port may be piped to a non-submerged location and fitted with a filter or strainer device. For the highest level of safety, QTRCO recommends method 3: piping the breather port to a non-submerged location. For Q2-Series actuators, the IP67 and IP68 ratings must be requested at the time of order.

All QTRCO actuators are shipped in the Fail-Close or Left-Hand orientation unless ordered as Fail-Open or Right-Hand. The mode of operation may be reversed in the field simply by turning the actuator top-side down.

1. **Fail-Close (Left-Hand):** pressure on the end cap port(s) pushes the piston(s) inward resulting in counterclockwise rotation. Exhaustion of pressure allows springs to push outward on the piston and cause clockwise rotation.
2. **Fail-Open (Right-Hand):** pressure on the end cap port(s) pushes the piston(s) inward resulting in clockwise rotation. Exhaustion of pressure allows springs push outward on the piston and cause counterclockwise rotation.
3. **Double Acting (Left-Hand):** pressure on the end cap port(s) pushes the piston(s) inward and causes counterclockwise rotation. Pressure on the body port pushes outward on the piston(s) and cause clockwise rotation.
4. **Double Acting (Right-Hand):** pressure on the end cap port(s) pushes the piston(s) inward and causes clockwise rotation. Pressure on the body port pushes outward on the piston(s) and cause counterclockwise rotation.

PIPING GUIDELINES:

1. Dual cylinder models (205, 210, 214), both endcap pressure ports (P1 and P2) must be utilized for proper operation.

2. P1 and P2 are typically connected together and powered by a single pathway.

3. Single Cylinder models (203, 204, 207, 212), port 2 (P2) does not exist.

4. Spring Return (SR and SD) models port 3 (P3) is a breather port.

5. P3 is a pressure port for Double Acting models.

6. P3 is a breather port for single cylinder SR models.

205DA, 210DA, 214DA

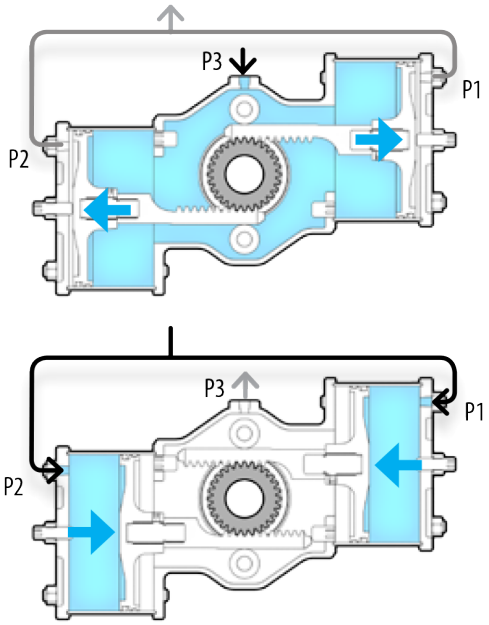

203DA, 204DA, 207DA, 212DA

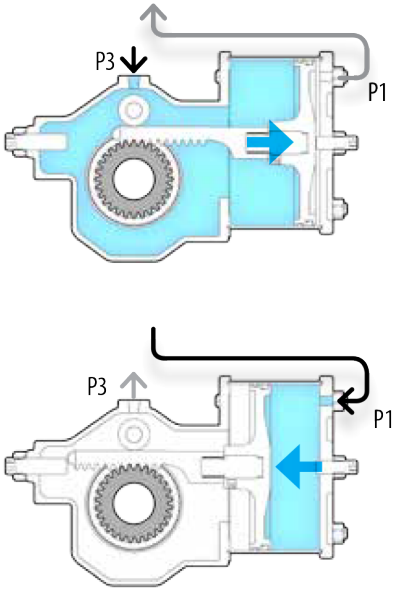

205SR, 210SR, 214SR

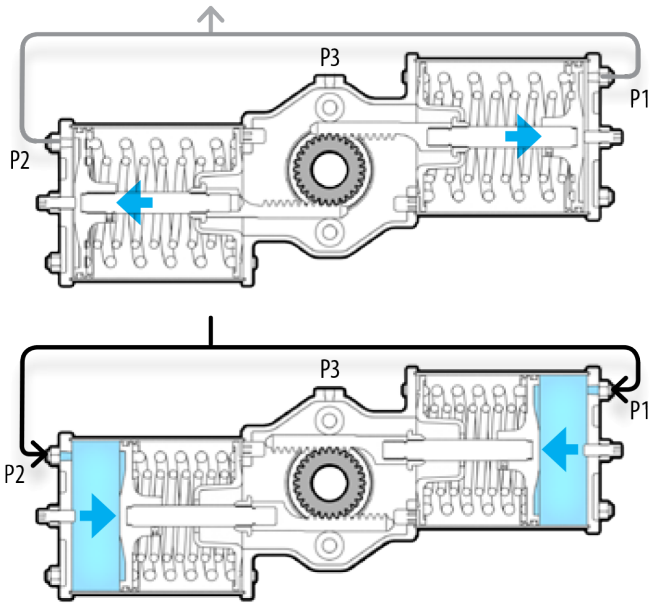

203SR, 204SR, 207SR, 212SR

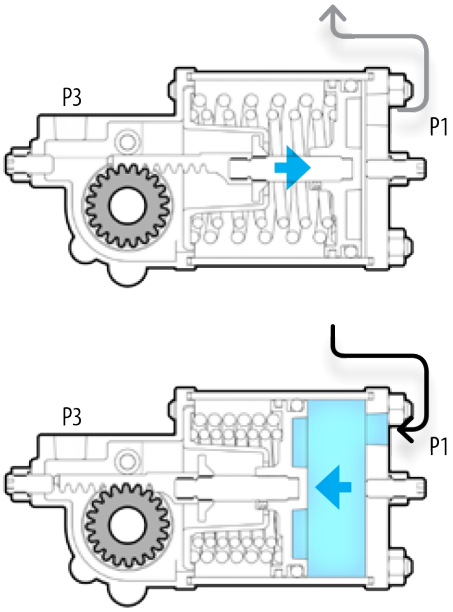

DIMENSIONS AND TECHNICAL DATA

SINGLE CYLINDER MODELS (203, 204, 207, 212)

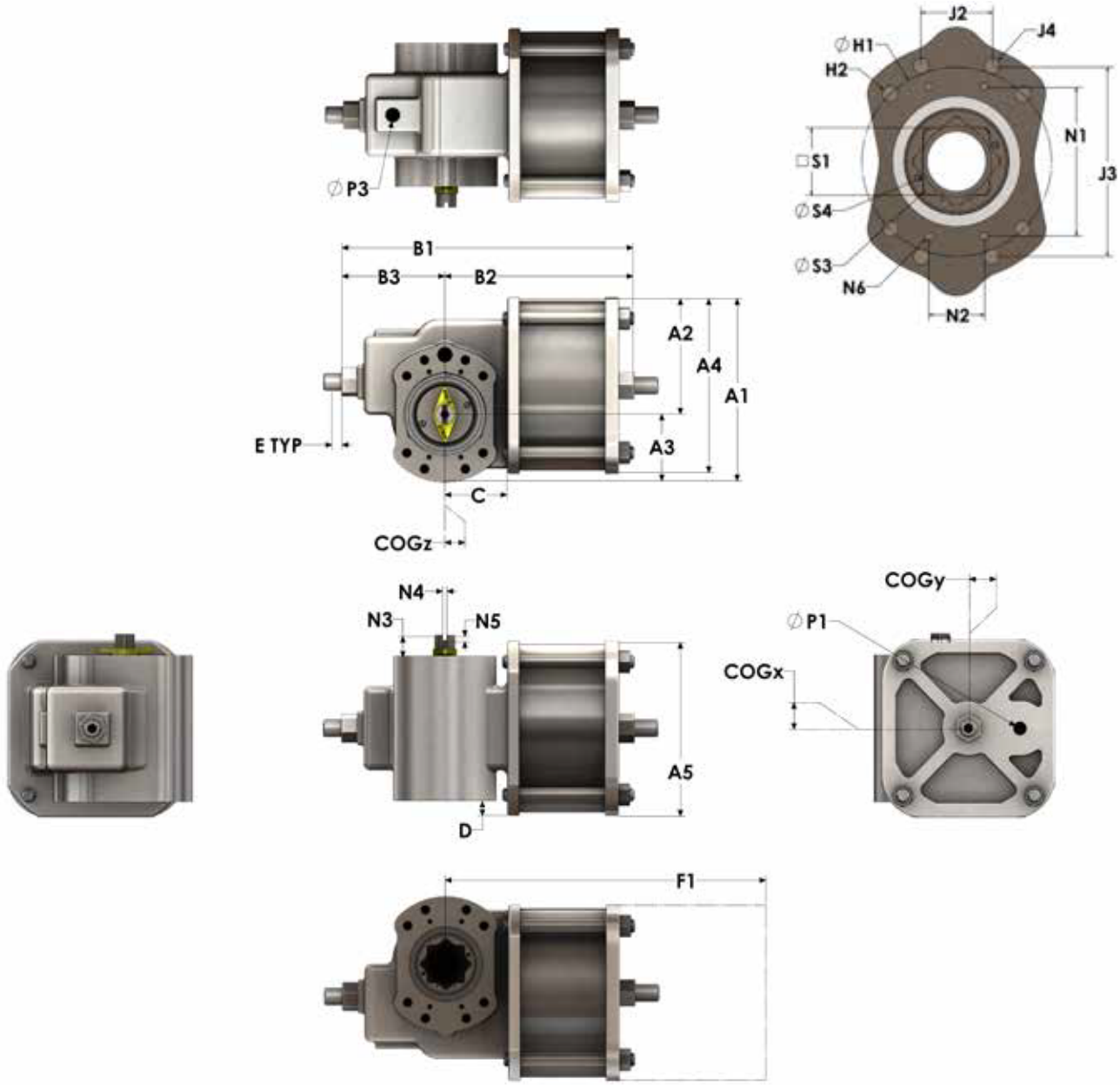

DIMENSIONS AND TECHNICAL DATA

DUAL CYLINDER MODELS (205, 210, 214)

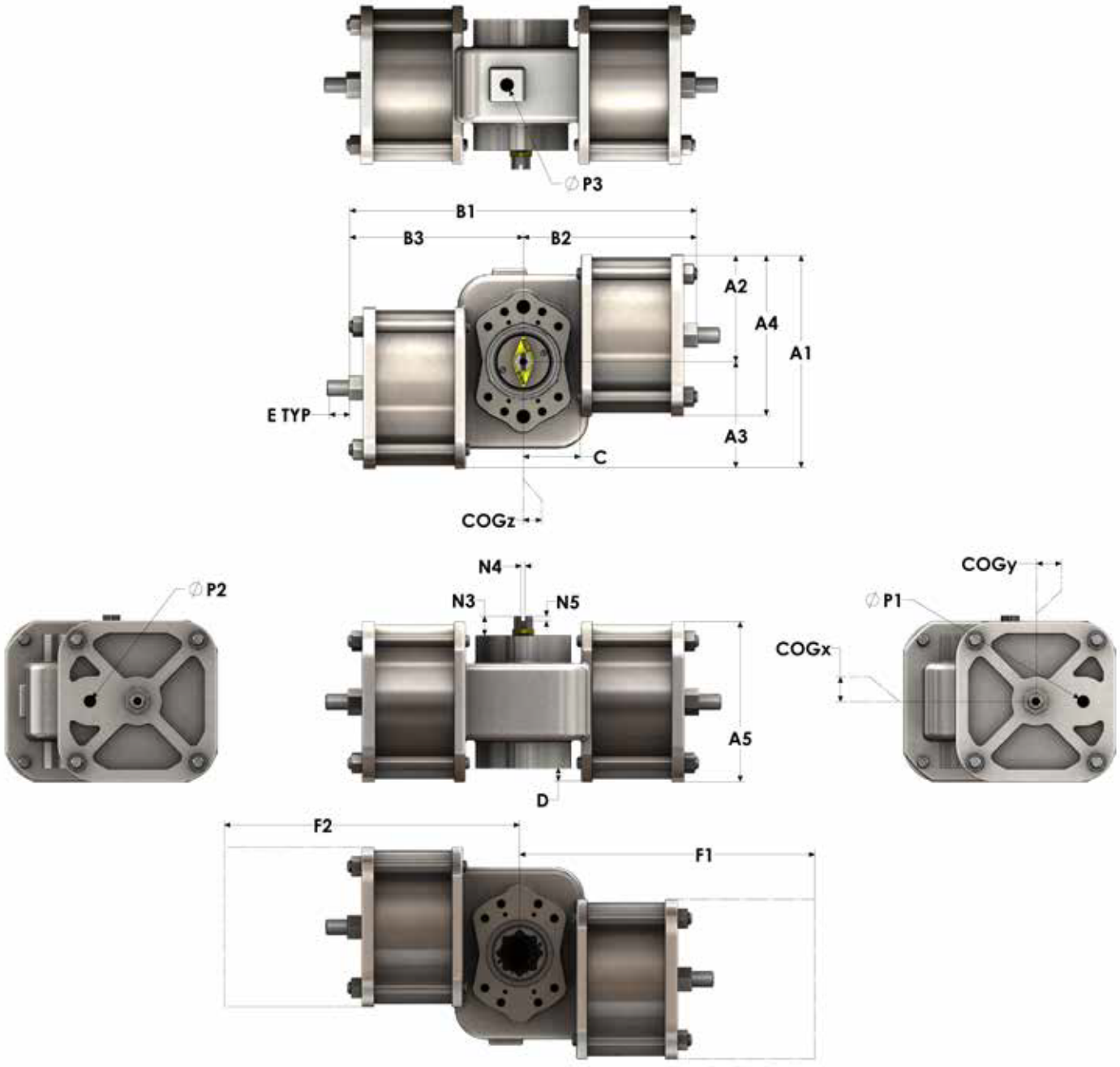

DIMENSIONS AND TECHNICAL DATA

(Imperial, Inches)

ENVELOPE DIMENSIONS		203		204		205			207		210			212		214			216
		DA	SR	DA	SR	DA	SD	SR	DA	SR	DA	SD	SR	DA	SR	DA	SD	SR	SR
Width Total	**A1**	4.19		4.75		5.75			6.81		8.62			10.06		12.24			18.14
Width Side 1	**A2**	2.31		2.88		2.88			4.31		4.31			6.12		6.12			9.07
Width Side 2	**A3**	1.88		1.88		2.88			2.50		4.31			3.95		6.12			9.07
Width Cylinder	**A4**	3.38		4.50		4.50			6.50		6.50			8.75		8.75			14.50
Height Cylinder	**A5**	3.38		4.50		4.50			6.50		6.50			8.75		8.75			14.50
Length Total	**B1**	5.71	6.67	7.16	9.01	9.10	10.95	12.80	10.89	15.19	14.10	18.40	22.70	15.95	20.68	20.31	25.04	29.77	37.00
Length Side 1	**B2**	3.77	4.73	4.55	6.40	4.55	6.40		7.05	11.35	7.05	11.35		10.16	14.89	10.16	14.89		18.50
Length Side 2	**B3**	1.94		2.61		4.55		6.40	3.85		7.05		11.35	5.80		10.16		14.89	18.50
Flange Distance	**C**	0.82		1.43		1.43			2.15		2.15			3.93		3.93			3.93
Flange Depth*	**D**	0.00		0.00		0.00			0.54		0.54			0.38		0.38			3.38
Stop Extension	**E**	0.29		0.29		0.29			0.68		0.68			0.59		0.59			0.59
Maint Clearance	**F1**	5.71	7.63	6.43	10.13	6.43	10.13		10.25	18.83	10.25	18.83		14.50	23.85	14.50	23.85		31.08
Maint Clearance	**F2**	–		–		6.43		10.13	–		10.25		18.83	–		14.50		23.85	31.08

*On 203, 204, and 205 models , the cylinder flange is flush with the mounting surface

ISO BOLT PATTERN		F05	F05/F07	F05/F07	F10	F10	F16	F16	F16
BCD 1	**H1**	1.969	1.969	1.969	4.016	4.016	6.496	6.496	6.496
Thread 1	**H2**	M6-1	M6-1	M6-1	M10-1.5	M10-1.5	M20-2.5	M20-2.5	M20-2.5
BCD 2	**J1**	–	2.756	2.756	–	–	–	–	–
RECT X	**J2**	–	–	–	1.52	1.52	2.00	2.00	2.00
RECT Y	**J3**	–	–	–	4.02	4.02	6.50	6.50	6.50
Thread 2	**J4**	–	M8-1.25	M8-1.25	–	–	–	–	–
Thread depth		0.63	0.63	0.63	0.88	0.88	1.00	1.00	1.00

Identical mounting patterns on both sides of actuator for all sizes. Size 203 has a single ISO pattern. Sizes 204/205 have two ISO patterns. Sizes 207/210/212/214 have an ISO pattern and a rectangular pattern.

NAMUR PATTERN		1	1	1	1	1	3	3	3
Length	**N1**	3.15	3.15	3.15	3.15	3.15	5.12	5.12	5.12
Width	**N2**	1.18	1.18	1.18	1.18	1.18	1.18	1.18	1.18
Height	**N3**	0.79	0.79	0.79	0.79	0.79	1.18	1.18	1.18
Slot Width	**N4**	0.157	0.157	0.157	0.157	0.157	0.157	0.157	0.157
Slot Depth	**N5**	0.197	0.197	0.197	0.197	0.197	0.197	0.197	0.197
Thread 2	**N6**	M5-0.8	M5-0.8	M5-0.8	M5-0.8	M5-0.8	M5-0.8	M5-0.8	M5-0.8
Thread Depth		0.375	0.375	0.375	0.375	0.375	0.375	0.375	0.375

The NAMUR slotted drive can be moved to the opposite side for field reversibility. 203, 204, and 205 sizes include a removable NAMUR adapter plate that can be moved to the opposite side.
The NAMUR adapter plate covers the accessory side mounting patterns when installed.

DIMENSIONS AND TECHNICAL DATA

(Imperial, Inches)

DOUBLE SQUARE FEMALE DRIVE		203		204		205			207		210			212		214			216
		DA	SR	DA	SR	DA	SD	SR	DA	SR	DA	SD	SR	DA	SR	DA	SD	SR	SR
		F07		F07		F07			F14		F14			F25		F25			F25
Square	**S1**	0.669		0.669		0.669			1.417		1.417			2.165		2.165			2.165
Square Depth	**S2**	1.30		1.30		1.30			1.00		1.00			1.80		1.80			1.80
Outer Diameter	**S3**	0.870		0.870		0.870			1.890		1.890			2.870		2.870			2.870
Inner Diameter	**S4**	0.750		0.750		0.750			1.600		1.600			2.430		2.430			2.430

Identical double square female drive on both sides of the actuator for all sizes

AIR/FLUID VOLUME cubic inches (cuin)	Body	14	-	25	-	44	-	-	111	-	166	-	-	302	-	469	-	-	-
	End Caps	9		15		30			59		117			163		326			700

PORT SIZE P1, P2, P3	Normal	1/4" NPT	1/4" NPT	1/4" NPT	1/4" NPT	1/4" NPT	1/4" NPT	1/4" NPT	3/4" NPT
	Max	1/2" NPT	1/2" NPT	1/2" NPT	3/4" NPT	3/4" NPT	1" NPT	1" NPT	2 ½" NPT

STROKE TIME seconds	Normal	0.25	0.5	0.5	1	1	3	3	3
	Min	0.01	0.015	0.015	0.03	0.03	0.05	0.05	0.05

*Stroke time varies with supply pressure, temperature, spring rate, travel adjustment, working medium, piping, accessory flow rates, and valve torque. Values shown with no valve resistance.

CENTER OF GRAVITY	COGx	0.41	0.45	0.43	0.47	0.00	0.89	0.00	0.88	0.88	0.00	0.00	0.00	0.94	1.12	0.01	0.03	0.01	0.00
	COGy	0.11	0.10	0.04	0.04	0.04	0.04	0.03	0.01	0.01	0.00	0.00	0.00	0.01	0.00	0.01	0.00	0.00	0.00
	COGz*	1.1/1.2	1.5/1.7	1.1/1.3	1.8/2.1	0.00	0.5/0.8	0.00	1.9/2.3	4.1/4.4	0.00	1.6/2.2	0.00	2.2/2.8	4.5/4.9	0.00	1.7/2	0.00	0.00

*CoGz is variable for some models and changes with actuator stroke. Values are shown as min/max.

WEIGHT pounds (lb)																			
	QS Stainless	6	7	14	17	22	25	29	33	51	52	70	88	87	113	126	151	177	455
	QD - Ductile	5	6	12	14	19	21	24	29	45	44	60	78	78	102	111	133	155	418

MAX PRESSURE psig	150	150	150	150	150	150	150	120

TEMPERATURE LIMITS

ULTRA-LOW	LOW	STANDARD	HIGH
-76ºF to 185ºF	-60ºF to 185ºF	-20ºF to 185ºF	-20ºF to 400ºF

Environmental temperature requirements may limit the use of certain trim materials. Temperature ranges may be extended with proper insulation. Ductile iron units may be used in low temperature (less than -28ºC), but stroke speed should be limited to prevent brittle fracture. Extended temperature ranges available upon request.

DIMENSIONS AND TECHNICAL DATA

(Imperial, Inches)

ENVELOPE DIMENSIONS		203		204		205			207		210			212		214			216
		DA	SR	DA	SR	DA	SD	SR	DA	SR	DA	SD	SR	DA	SR	DA	SD	SR	SR
Width Total	**A1**	106		121		146			173		219			256		311			460
Width Side 1	**A2**	59		73		73			109		109			155		155			231
Width Side 2	**A3**	48		48		73			64		109			100		155			231
Width Cylinder	**A4**	86		114		114			165		165			222		222			368
Height Cylinder	**A5**	86		114		114			165		165			222		222			368
Length Total	**B1**	145	169	182	229	231	278	325	277	386	358	467	577	405	525	516	636	756	940
Length Side 1	**B2**	96	120	116	163	116	163		179	288	179	288		258	378	258	378		476
Length Side 2	**B3**	49		66		116		163	98		179		288	147		258		378	476
Flange Distance	**C**	21		36		36			55		55			100		100			100
Flange Depth*	**D**	0		0		0			14		14			10		10			86
Stop Extension	**E**	7		7		7			17		17			15		15			15
Maint Clearance	**F1**	145	194	163	257	163	257		260	478	260	478		368	606	368	606		790
Maint Clearance	**F2**	-		-		163		257	-		260		478	-		368		606	790

*On 203, 204, and 205 models , the cylinder flange is flush with the mounting surface

ISO BOLT PATTERN		F05	F05/F07	F05/F07	F10	F10	F16	F16	F16
BCD 1	**H1**	50.0	50.0	50.0	102.0	102.0	165.0	165.0	165.0
Thread 1	**H2**	M6-1	M6-1	M6-1	M10-1.5	M10-1.5	M20-2.5	M20-2.5	M20-2.5
BCD 2	**J1**	–	70.0	70.0	–	–	–	–	–
RECT X	**J2**	–	–	–	38.6	38.6	50.8	50.8	50.8
RECT Y	**J3**	–	–	–	102.0	102.0	165.1	165.1	165.1
Thread 2	**J4**	–	M8-1.25	M8-1.25	–	–	–	–	–
Thread depth		15.9	15.9	15.9	22.2	22.2	25.4	25.4	25.4

Identical mounting patterns on both sides of actuator for all sizes. Size 203 has a single ISO pattern. Sizes 204/205 have two ISO patterns. Sizes 207/210/212/214 have an ISO pattern and a rectangular pattern.

NAMUR PATTERN		1	1	1	1	1	3	3	3
Length	**N1**	80	80	80	80	80	130	130	130
Width	**N2**	30	30	30	30	30	30	30	30
Height	**N3**	20	20	20	20	20	30	30	30
Slot Width	**N4**	4	4	4	4	4	4	4	4
Slot Depth	**N5**	5	5	5	5	5	5	5	5
Thread 2	**N6**	M5-0.8	M5-0.8	M5-0.8	M5-0.8	M5-0.8	M5-0.8	M5-0.8	M5-0.8
Thread Depth		9.5	9.5	9.5	9.5	9.5	9.5	9.5	9.5

The NAMUR slotted drive can be moved to the opposite side for field reversibility. 203, 204, and 205 sizes include a removable NAMUR adapter plate that can be moved to the opposite side.
The NAMUR adapter plate covers the accessory side mounting patterns when installed.

DIMENSIONS AND TECHNICAL DATA

(Metric, Millimeters)

DOUBLE SQUARE FEMALE DRIVE		203		204		205			207		210			212		214			216
		DA	SR	DA	SR	DA	SD	SR	DA	SR	DA	SD	SR	DA	SR	DA	SD	SR	SR
		F07		F07		F07			F14		F14			F25		F25			F25
Square	**S1**	17		17		17			36		36			55		55			55
Square Depth	**S2**	33		33		33			25		25			46		46			46
Outer Diameter	**S3**	22.1		22.1		22.1			48.0		48.0			72.9		72.9			72.9
Inner Diameter	**S4**	19.1		19.1		19.1			40.6		40.6			61.7		61.7			61.7

Identical double square female drive on both sides of the actuator for all sizes

AIR/FLUID VOLUME cubic inches (cuin)	Body	0.23	-	0.40	-	0.72	-	-	1.81	-	2.72	-	-	4.95	-	7.69	-	-	-
	End Caps	0.15		0.25		0.49			0.97		1.92			2.67		5.34			11.47

PORT SIZE P1, P2, P3	Normal	1/4" NPT	1/4" NPT	1/4" NPT	1/4" NPT	1/4" NPT	1/4" NPT	1/4" NPT	3/4" NPT
	Max	1/2" NPT	1/2" NPT	1/2" NPT	3/4" NPT	3/4" NPT	1" NPT	1" NPT	2 ½" NPT

STROKE TIME seconds	Normal	0.25	0.5	0.5	1	1	3	3	3
	Min	0.01	0.015	0.015	0.03	0.03	0.05	0.05	0.10

*Stroke time varies with supply pressure, temperature, spring rate, travel adjustment, working medium, piping, accessory flow rates, and valve torque. Values shown with no valve resistance.

CENTER OF GRAVITY	COGx	10	11	11	12	0	23	0	22	22	0	0	0	24	28	0	1	0	0
	COGy	3	3	1	1	1	1	1	0	0	0	0	0	0	0	0	0	0	0
	COGz*	27/31	39/42	28/33	46/53	0.00	13/19	0.00	47/57	104/112	0.00	41/55	0.00	56/71	114/124	0.00	43/51	0	0

*CoGz is variable for some models and changes with actuator stroke. Values are shown as min/max.

WEIGHT pounds (lb)																			
	QS Stainless	2.7	3.2	6.4	7.7	10.0	11.4	13.2	15.0	23.2	23.6	31.8	40.0	39.5	51.4	57.3	68.6	80.5	206.8
	QD - Ductile	2.3	2.7	5.5	6.4	8.6	9.5	10.9	13.2	20.5	20.0	27.3	35.5	35.5	46.4	50.5	60.5	70.5	190.0

MAX PRESSURE psig	10.34	10.34	10.34	10.34	10.34	10.34	10.34	8.27

TEMPERATURE LIMITS

ULTRA-LOW	LOW	STANDARD	HIGH
-60ºC to 85ºC	-51ºC to 85ºC	-28ºC to 85ºC	-28ºC to 204ºC

Environmental temperature requirements may limit the use of certain trim materials. Temperature ranges may be extended with proper insulation. Ductile iron units may be used in low temperature (less than -28ºC), but stroke speed should be limited to prevent brittle fracture. Extended temperature ranges available upon request.

PRESSURE EQUIPMENT DIRECTIVE CATEGORY CLASSIFICATION

The European Pressure Equipment Directive (PED, 2014/68/EU, supersedes 97/23/EC) requires equipment to be placed in categories based on Fluid Group and BarLiter rating. It is the responsibility of the end user to inform QTRCO of PED requirements, including the Fluid Group determination, prior to order. QTRCO Q2-Series actuator ratings are listed below:

Model	Barliter Rating	CATEGORY	
		Fluid Group 2	For Fluid Group 1
Q203SR	1.52	SEP	SEP
Q203SP1	2.37	SEP	SEP
Q204SR	2.88	SEP	SEP
Q204SP1	4.39	SEP	SEP
Q205SD	5.59	SEP	SEP
Q205SR	5.59	SEP	SEP
Q205SP1	8.81	SEP	SEP
Q205SE-C1	6.71	SEP	SEP
Q205SE-C2	8.94	SEP	SEP
Q207SR	11.18	SEP	SEP
Q207SP1	17.88	SEP	SEP
Q210SD	22.52	SEP	SEP
Q210SR	22.52	SEP	SEP
Q210SP1	35.90	SEP	1
Q210SE-C1	27.10	SEP	1
Q210SE-C2	36.04	SEP	1
Q212SR	29.64	SEP	1
Q212SP1	47.15	SEP	1
Q214SR	59.11	1	2
Q214SP1	94.30	1	2
Q214SE-C1	71.00	1	2
Q214SE-C2	94.57	1	2

Model	Barliter Rating	CATEGORY	
		Fluid Group 2	For Fluid Group 1
Q203DA	2.03	SEP	SEP
Q203DP1	2.61	SEP	SEP
Q204DA	5.42	SEP	SEP
Q204DP1	5.42	SEP	SEP
Q205DA	8.30	SEP	SEP
Q205DP1	11.18	SEP	SEP
Q207DA	18.46	SEP	SEP
Q207DP1	18.46	SEP	SEP
Q210DA	31.50	SEP	1
Q210DP1	44.88	SEP	1
Q212DA	53.69	1	2
Q212DP1	53.69	1	2
Q214DA	82.82	1	2
Q214DP1	118.21	1	2

Ratings are shown at maximum operating pressure. Models that fall under SEP are below the minimum BarLiter rating and may not be marked as PED by regulation. SEP actuators are compliant by exemption, and may still be installed in any application that has a PED requirement.

OUTPUT TORQUE DATA

The following tables show output torque for common pressures. For additional output information, download the interactive toque tables at QTRCO.com. Actuators may generate more torque than the maximum rating at higher pressures (refer to page 6 for torque ratings).

DOUBLE ACTING (in-lb)

psig	20	30	40	50	60	70	80	90	100	110	120	130	140	150	MOP psi	MAWP psi	Max Rated Torque in-lb
203DA	71	106	141	177	212	247	283	318	353	389	424	459	495	530	141	150	500
204DA	126	188	251	314	377	440	503	565	628	691	754	817	880		131	150	825
205DA	276	415	553	691	829	968	1,106	1,244	1,382	1,521	1,659				119	150	1,650
207DA	481	721	962	1,202	1,443	1,683	1,924	2,164	2,404	2,645	2,885	3,126	3,366		137	150	3,300
210DA	1,058	1,587	2,116	2,645	3,174	3,703	4,232	4,761	5,290	5,819	6,348	6,877			125	150	6,600
212DA	1,407	2,111	2,815	3,519	4,222	4,926	5,630	6,333	7,037	7,741	8,445	9,148	9,852	10,556	149	150	10,500
214DA	3,096	4,645	6,193	7,741	9,289	10,837	12,385	13,934	15,482	17,030	18,578	20,126	21,674		136	150	21,000

DOUBLE ACTING (N-m)

bar	1.5	2.0	2.5	3.0	3.5	4.0	50	5.52	6.0	7.0	8.0	9.0	10.0	10.34	MOP bar	MAWP bar	Max Rated Torque N.m.
203DA	9	12	14	17	20	23	29	32	35	41	46	52	58	60	9.73	10.34	56.5
204DA	15	21	26	31	36	41	51	57	62	72	82	93	103		9.05	10.34	93
205DA	34	45	57	68	79	91	113	125	136	159	181				8.23	10.34	186
207DA	59	79	99	118	138	158	197	218	236	276	315	355	394		9.46	10.34	373
210DA	130	173	217	260	303	347	433	479	520	607	693	780			8.60	10.34	746
212DA	173	231	288	346	404	461	577	637	692	807	923	1,038	1,153	1,192	10.29	10.34	1,186
214DA	381	507	634	761	888	1,015	1,269	1,400	1,522	1,776	2,030	2,283	2,537		9.35	10.34	2,373

MAX RATED TORQUE - Actuators should not be sized above their maximum torque rating unless there is no possibility that the valve will resist with a value above that rating.

SIZE:	203	204	205	207	210	212	214
in-lb:	500	825	1,650	3,300	6,600	10,500	21,000
N-m:	56	93	186	373	746	1,186	2,373

OUTPUT TORQUE DATA (CONTINUED)

SPRING RETURN (in-lb)		SPRINGS		20 psig		30 psig		40 psig		50 psig		60 psig		70 psig		80 psig		90 psig	
		START	END	START	END	START	END	START	END	START	END	START	END	START	END	START	END	START	END
203	203SR-S10	76	46			60	32	95	68	131	104	166	140	201	176	237	212	272	248
	203SR-S20	102	74					67	40	103	75	138	110	173	146	209	181	244	216
	203SR-S30	130	85							92	47	127	83	163	118	198	153	233	189
	203SR-S40	168	117											131	79	166	115	201	150
	203SR-S50	186	136											112	61	147	97	183	132
204	204SR-S10	110	86	40	15	103	78	166	141	228	203	291	266	354	329	417	392	480	454
	204SR-S20	148	124			64	40	127	103	190	166	253	229	315	292	378	355	441	418
	204SR-S30	216	161							153	97	216	160	278	223	341	285	404	348
	204SR-S40	253	200									177	123	240	186	302	248	365	311
	204SR-S50	289	210											229	150	292	213	355	276
	204SR-S60	327	248											191	112	253	175	316	238
	204SR-S70	423	317													185	79	248	142
205	205SD-S30	257	191	107	41	256	190	405	339	554	488	703	637	852	786	1,001	935	1,150	1,084
	205SD-S40	301	237			211	147	360	296	510	445	659	594	808	743	958	892	1,107	1,042
	205SD-S50	343	249			199	105	348	254	497	403	646	552	795	701	944	850	1,094	1,000
	205SD-S60	388	295			153	60	302	209	451	358	600	507	749	656	898	805	1,048	955
	205SD-S70	502	376					221	95	371	244	520	393	669	542	819	691	968	841
	205SR-S10	243	189	87	33	225	171	363	309	501	447	639	585	777	723	915	861	1,053	999
	205SR-S20	326	272			142	89	280	227	418	366	556	504	694	642	832	781	970	919
	205SR-S30	476	354							338	216	476	354	614	492	753	631	891	769
	205SR-S40	558	439									391	270	529	409	668	547	806	685
	205SR-S50	635	461											505	331	643	469	781	607
	205SR-S60	719	547											420	247	558	385	696	523
	205SR-S70	930	697													408	174	546	312
207	207SR-S09	492	389			332	229	573	470	813	710	1,053	951	1,294	1,191	1,534	1,432	1,775	1,672
	207SR-S11	644	478					483	318	724	559	964	799	1,205	1,040	1,445	1,280	1,685	1,521
	207SR-S12	733	585					376	228	617	469	857	709	1,098	949	1,338	1,190	1,579	1,430
	207SR-S13	836	643							559	366	799	606	1,040	847	1,280	1,087	1,520	1,328
	207SR-S31	1,225	974											709	458	949	698	1,189	939
	207SR-S32	1,378	1,064											619	305	860	546	1,100	786
	207SR-S33	1,480	1,122													802	444	1,042	684

MAX RATED TORQUE Actuators should not be sized above their maximum torque rating unless there is no possibility that the valve will resist with a value above that rating.

SIZE:	203	204	205	207	210	212	214	216
in-lb:	500	825	1,650	3,300	6,600	10,500	21,000	21,000

OUTPUT TORQUE DATA (CONTINUED)

SPRING RETURN (in-lb)		100 psig		110 psig		120 psig		130 psig		140 psig		150 psig		MOP psi	MAWP psi	Max Rated Torque in-lb
		START	END	START	END	START	END	START	END	START	END	START	END			
203	203SR-S10	307	284	343	319	378	355	413	391	449	427	484	463	150	150	484
	203SR-S20	280	252	315	287	350	323	386	358	421	393	456	429	150	150	456
	203SR-S30	269	224	304	259	339	295	375	330	410	365	445	401	150	150	445
	203SR-S40	237	185	272	221	307	256	343	291	378	327	413	362	150	150	413
	203SR-S50	218	168	253	203	289	238	324	274	360	309	395	344	150	150	395
204	204SR-S10	543	517	606	580	669	643	732	705	794	768	857	831	145	150	825
	204SR-S20	504	481	566	543	629	606	692	669	755	732	817	795	150	150	817
	204SR-S30	467	411	529	474	592	536	655	599	717	662	780	725	150	150	780
	204SR-S40	428	374	491	437	553	499	616	562	679	625	741	688	150	150	741
	204SR-S50	418	339	480	401	543	464	606	527	669	589	731	652	150	150	731
	204SR-S60	379	301	442	363	504	426	567	489	630	552	693	614	150	150	693
	204SR-S70	311	205	373	267	436	330	499	393	562	456	624	518	150	150	624
205	205SD-S30	1,299	1,233	1,448	1,382	1,597	1,531	1,746	1,680	1,895	1,829	2,044	1,978	124	150	1,650
	205SD-S40	1,256	1,191	1,406	1,340	1,555	1,489	1,704	1,638	1,854	1,787	2,003	1,937	126	150	1,650
	205SD-S50	1,243	1,149	1,392	1,298	1,541	1,447	1,690	1,596	1,839	1,745	1,989	1,895	127	150	1,650
	205SD-S60	1,197	1,104	1,346	1,253	1,495	1,402	1,644	1,551	1,793	1,700	1,943	1,850	130	150	1,650
	205SD-S70	1,117	990	1,267	1,139	1,416	1,288	1,565	1,437	1,715	1,586	1,864	1,736	136	150	1,650
	205SR-S10	1,191	1,138	1,329	1,276	1,467	1,414	1,605	1,552					133	150	1,650
	205SR-S20	1,108	1,057	1,246	1,196	1,384	1,334	1,522	1,472					139	150	1,650
	205SR-S30	1,029	907	1,168	1,046	1,306	1,184	1,444	1,322	1,583	1,460			145	150	1,650
	205SR-S40	944	823	1,083	961	1,221	1,099	1,359	1,237	1,498	1,375	1,636	1,513	150	150	1,636
	205SR-S50	919	745	1,057	883	1,195	1,021	1,333	1,159	1,471	1,297	1,609	1,435	150	150	1,609
	205SR-S60	834	661	972	799	1,110	937	1,248	1,075	1,386	1,213	1,524	1,351	150	150	1,524
	205SR-S70	684	450	822	588	960	726	1,098	864	1,236	1,002	1,374	1,140	150	150	1,374
207	207SR-S09	2,015	1,912	2,256	2,153	2,496	2,393	2,736	2,634	2,977	2,874	3,217	3,115	150	150	3,217
	207SR-S11	1,926	1,761	2,166	2,002	2,407	2,243	2,647	2,483	2,888	2,724	3,128	2,964	150	150	3,128
	207SR-S12	1,819	1,671	2,059	1,911	2,300	2,152	2,540	2,392	2,781	2,632	3,021	2,873	150	150	3,021
	207SR-S13	1,761	1,568	2,001	1,808	2,242	2,049	2,482	2,289	2,723	2,530	2,963	2,770	150	150	2,963
	207SR-S31	1,430	1,179	1,670	1,419	1,911	1,660	2,151	1,900	2,392	2,141	2,632	2,381	150	150	2,632
	207SR-S32	1,341	1,027	1,581	1,267	1,821	1,507	2,062	1,748	2,302	1,988	2,543	2,229	150	150	2,543
	207SR-S33	1,283	925	1,523	1,165	1,763	1,405	2,004	1,646	2,244	1,886	2,485	2,127	150	150	2,485

MAX RATED TORQUE - Actuators should not be sized above their maximum torque rating unless there is no possibility that the valve will resist with a value above that rating.

SIZE:	203	204	205	207	210	212	214	216
in-lb:	500	825	1,650	3,300	6,600	10,500	21,000	21,000

OUTPUT TORQUE DATA (CONTINUED)

SPRING RETURN (in-lb)		SPRINGS		20 psig		30 psig		40 psig		50 psig		60 psig		70 psig		80 psig		90 psig	
		START	END	START	END	START	END	START	END	START	END	START	END	START	END	START	END	START	END
210	210SD-S09	584	462	680	558	1,252	1,129	1,823	1,700	2,394	2,271	2,965	2,842	3,536	3,413	4,107	3,984	4,679	4,555
	210SD-S11	765	568	574	377	1,145	949	1,716	1,520	2,287	2,091	2,858	2,662	3,429	3,233	4,000	3,804	4,571	4,376
	210SD-S12	871	695	447	271	1,018	842	1,589	1,413	2,160	1,984	2,731	2,555	3,302	3,126	3,873	3,697	4,444	4,268
	210SD-S13	993	764	378	149	949	721	1,520	1,292	2,091	1,863	2,662	2,434	3,233	3,005	3,804	3,576	4,375	4,148
	210SD-S31	1,455	1,157			556	258	1,127	829	1,698	1,400	2,269	1,971	2,840	2,542	3,411	3,113	3,982	3,684
	210SD-S32	1,636	1,263			450	78	1,021	649	1,592	1,220	2,163	1,791	2,734	2,362	3,305	2,933	3,876	3,505
	210SD-S33	1,757	1,332					952	527	1,523	1,098	2,094	1,669	2,665	2,240	3,236	2,811	3,807	3,382
	210SR-S09	1,082	856			731	505	1,260	1,034	1,789	1,563	2,319	2,092	2,848	2,621	3,377	3,149	3,906	3,678
	210SR-S11	1,416	1,052					1,063	699	1,592	1,228	2,121	1,757	2,650	2,286	3,179	2,815	3,708	3,344
	210SR-S12	1,615	1,288					828	502	1,357	1,031	1,886	1,560	2,415	2,089	2,944	2,618	3,473	3,147
	210SR-S13	1,840	1,415							1,229	806	1,758	1,335	2,287	1,864	2,816	2,393	3,345	2,922
	210SR-S31	2,697	2,143											1,560	1,007	2,089	1,536	2,618	2,065
	210SR-S32	3,031	2,341											1,363	673	1,892	1,202	2,421	1,731
	210SR-S33	3,256	2,469													1,764	977	2,293	1,506
212	212SR-S10	2,493	1,676							1,843	1,022	2,547	1,725	3,250	2,428	3,954	3,130	4,658	3,833
	212SR-S20	2,659	1,986							1,533	859	2,237	1,563	2,940	2,267	3,644	2,970	4,348	3,674
	212SR-S30	3,297	2,222											2,704	1,629	3,407	2,333	4,111	3,037
	212SR-S40	4,093	2,956													2,674	1,537	3,378	2,241
214	214SD-S20	3,158	2,358	985	185	2,656	1,856	4,327	3,527	5,999	5,199	7,670	6,870	9,341	8,541	11,013	10,213	12,684	11,884
	214SD-S30	3,915	2,639			2,375	1,099	4,046	2,770	5,718	4,442	7,389	6,113	9,060	7,784	10,732	9,456	12,403	11,127
	214SD-S40	4,860	3,510			1,504	154	3,175	1,825	4,847	3,496	6,518	5,167	8,189	6,838	9,861	8,509	11,532	10,181
	214SR-S10	5,484	3,687							4,054	2,248	5,602	3,794	7,151	5,341	8,699	6,887	10,247	8,433
	214SR-S20	5,851	4,369							3,372	1,890	4,921	3,438	6,469	4,987	8,017	6,535	9,565	8,083
	214SR-S30	7,253	4,889									4,400	2,036	5,948	3,584	7,496	5,132	9,045	6,681
	214SR-S40	9,004	6,503													5,883	3,382	7,431	4,930
216	216SR-S10	9,728	6,842			3,608	723	7,091	4,206	10,575	7,689	14,058	11,173	17,541	14,656	21,025	18,140	24,508	21,623
	216SR-S20	11,233	8,768					5,166	2,701	8,649	6,184	12,133	9,667	15,616	13,151	19,100	16,634	22,583	20,118
	216SR-S30	16,397	12,506									8,394	4,504	11,878	7,987	15,361	11,470	18,844	14,954
	216SR-S40	21,000	15,571													12,297	6,867	15,780	10,351

MAX RATED TORQUE - Actuators should not be sized above their maximum torque rating unless there is no possibility that the valve will resist with a value above that rating.

SIZE:	203	204	205	207	210	212	214	216
in-lb:	500	825	1,650	3,300	6,600	10,500	21,000	21,000

OUTPUT TORQUE DATA (CONTINUED)

SPRING RETURN (in-lb)		100 psig		110 psig		120 psig		130 psig		140 psig		150 psig		MOP psi	MAWP psi	Max Rated Torque in-lb
		START	END	START	END	START	END	START	END	START	END	START	END			
210	210SD-S09	5,250	5,126	5,821	5,697	6,392	6,268	6,963	6,839	7,534	7,410	8,106	7,981	124	150	6,600
	210SD-S11	5,142	4,947	5,713	5,518	6,284	6,089	6,855	6,660	7,426	7,231	7,997	7,803	126	150	6,600
	210SD-S12	5,015	4,839	5,586	5,410	6,157	5,981	6,728	6,552	7,299	7,123	7,870	7,694	128	150	6,600
	210SD-S13	4,946	4,719	5,517	5,290	6,088	5,861	6,659	6,432	7,230	7,003	7,801	7,575	129	150	6,600
	210SD-S31	4,553	4,255	5,124	4,826	5,695	5,397	6,266	5,968	6,837	6,539	7,408	7,110	136	150	6,600
	210SD-S32	4,447	4,076	5,018	4,647	5,589	5,218	6,160	5,789	6,731	6,360	7,302	6,932	138	150	6,600
	210SD-S33	4,378	3,953	4,949	4,524	5,520	5,095	6,091	5,666	6,662	6,237	7,233	6,808	139	150	6,600
	210SR-S09	4,435	4,207	4,964	4,736	5,493	5,265	6,022	5,794					141	150	6,600
	210SR-S11	4,237	3,873	4,766	4,402	5,295	4,931	5,824	5,460	6,353	5,989			145	150	6,600
	210SR-S12	4,002	3,676	4,531	4,205	5,060	4,734	5,588	5,263	6,117	5,793			149	150	6,600
	210SR-S13	3,874	3,451	4,403	3,980	4,932	4,509	5,461	5,038	5,990	5,567	6,518	6,097	150	150	6,518
	210SR-S31	3,147	2,594	3,676	3,123	4,205	3,652	4,735	4,182	5,264	4,711	5,793	5,240	150	150	5,793
	210SR-S32	2,950	2,260	3,479	2,789	4,008	3,318	4,537	3,847	5,066	4,376	5,595	4,905	150	150	5,595
	210SR-S33	2,822	2,035	3,351	2,564	3,880	3,093	4,409	3,622	4,938	4,151	5,468	4,680	150	150	5,468
212	212SR-S10	5,361	4,536	6,065	5,239	6,769	5,942	7,473	6,645	8,176	7,348	8,880	8,051	150	150	8,880
	212SR-S20	5,052	4,378	5,755	5,082	6,459	5,785	7,163	6,489	7,866	7,193	8,570	7,896	150	150	8,570
	212SR-S30	4,815	3,740	5,519	4,444	6,222	5,148	6,926	5,852	7,630	6,555	8,333	7,259	150	150	8,333
	212SR-S40	4,081	2,945	4,785	3,648	5,489	4,352	6,193	5,056	6,896	5,759	7,600	6,463	150	150	7,600
214	214SD-S20	14,355	13,555	16,027	15,227	17,698	16,898	19,369	18,569	21,041	20,241	22,712	21,912	140	150	21,000
	214SD-S30	14,074	12,798	15,746	14,470	17,417	16,141	19,088	17,812	20,760	19,484	22,431	21,155	141	150	21,000
	214SD-S40	13,203	11,852	14,875	13,523	16,546	15,194	18,217	16,865	19,889	18,536	21,560	20,208	147	150	21,000
	214SR-S10	11,795	9,980	13,343	11,526	14,891	13,072	16,440	14,618	17,988	16,165	19,536	17,711	150	150	19,536
	214SR-S20	11,113	9,631	12,662	11,179	14,210	12,728	15,758	14,276	17,306	15,824	18,854		150	150	18,854
	214SR-S30	10,593	8,229	12,141	9,777	13,689	11,325	15,237	12,873	16,785	14,422	18,334	15,970	150	150	18,334
	214SR-S40	8,979	6,478	10,527	8,026	12,075	9,574	13,624	11,123	15,172	12,671	16,720	14,219	150	150	16,720
216	216SR-S10													80	120	21,000
	216SR-S20													85	120	21,000
	216SR-S30	22,328	18,437											96	120	21,000
	216SR-S40	19,263	13,834	22,747	17,317									105	120	21,000

MAX RATED TORQUE - Actuators should not be sized above their maximum torque rating unless there is no possibility that the valve will resist with a value above that rating.

SIZE:	203	204	205	207	210	212	214	216
in-lb:	500	825	1,650	3,300	6,600	10,500	21,000	21,000

OUTPUT TORQUE DATA (CONTINUED)

SPRING RETURN (N-m)		SPRINGS		1.5 bar		2.0 bar		2.5 bar		3.0 bar		3.5 bar		4.0 bar		5.0 bar		5.52 bar	
		START	END	START	END	START	END	START	END	START	END	START	END	START	END	START	END	START	END
203	203SR-S10	9	5			6	3	9	6	12	9	15	12	18	15	24	21	27	24
	203SR-S20	12	8					6	3	9	6	12	9	15	12	21	17	24	20
	203SR-S30	15	10							8	3	11	6	14	9	19	14	22	17
	203SR-S40	19	13											10	4	16	10	19	13
	203SR-S50	21	15											8	2	14	8	17	11
204	204SR-S10	12	10	6	3	11	8	16	13	21	18	26	24	32	29	42	39	47	44
	204SR-S20	17	14			7	4	12	9	17	14	22	19	27	24	37	35	43	40
	204SR-S30	24	18							13	6	18	12	23	17	33	27	39	32
	204SR-S40	29	23									13	7	19	12	29	23	34	28
	204SR-S50	33	24											17	8	28	19	33	24
	204SR-S60	37	28											13	4	23	14	29	20
	204SR-S70	48	36													16	4	21	9
205	205SD-S30	29	22	12	5	29	21	46	38	63	55	79	72	96	89	113	106	130	122
	205SD-S40	34	27			24	17	41	33	58	50	74	67	91	84	108	101	125	118
	205SD-S50	39	28			22	12	39	29	56	46	73	62	90	79	107	96	124	113
	205SD-S60	44	33			17	7	34	24	51	40	68	57	85	74	101	91	118	108
	205SD-S70	57	42			0	0	25	11	42	28	59	44	76	61	93	78	109	95
	205SR-S10	27	21	13	7	24	18	35	29	47	40	58	52	69	63	92	86	103	97
	205SR-S20	37	31			14	8	26	20	37	31	48	42	60	54	82	77	94	88
	205SR-S30	54	40							28	14	39	26	51	37	73	60	85	71
	205SR-S40	63	50									30	16	41	27	64	50	76	62
	205SR-S50	72	52											38	19	61	41	73	53
	205SR-S60	81	62											29	9	51	32	63	44
	205SR-S70	105	79													34	8	46	20
207	207SR-S09	56	44			35	23	55	43	74	63	94	82	114	102	153	141	174	162
	207SR-S11	73	54					44	26	64	45	84	65	104	85	143	124	163	145
	207SR-S12	83	66					32	16	52	35	72	55	91	75	131	114	151	135
	207SR-S13	94	73							46	24	65	43	85	63	124	103	145	123
	207SR-S31	138	110											48	19	87	59	107	79
	207SR-S32	156	120											37	2	77	41	97	62
	207SR-S33	167	127													70	30	91	50

	SIZE:	203	204	205	207	210	212	214	216
MAX RATED TORQUE - Actuators should not be sized above their maximum torque rating unless there is no possibility that the valve will resist with a value above that rating.	N-m:	56	93	186	373	746	1,186	2,373	2,373

OUTPUT TORQUE DATA (CONTINUED)

SPRING RETURN (N-m)		6.0 bar		7.0 bar		8.0 bar		9.0 bar		10.0 bar		10.34 bar		MOP bar	MAWP bar	Max Rated Torque N-m
		START	END	START	END	START	END	START	END	START	END	START	END			
203	203SR-S10	30	27	35	33	41	39	47	44	53	50	55	52	10.34	10.34	55
	203SR-S20	26	23	32	29	38	35	44	41	50	46	52	48	10.34	10.34	52
	203SR-S30	25	20	31	26	37	32	43	38	48	43	50	45	10.34	10.34	50
	203SR-S40	22	16	27	22	33	27	39	33	45	39	47	41	10.34	10.34	47
	203SR-S50	19	14	25	20	31	25	37	31	43	37	45	39	10.34	10.34	45
204	204SR-S10	52	49	62	60	73	70	83	80	93	90	97	94	9.98	10.34	93
	204SR-S20	48	45	58	55	68	66	79	76	89	86	92	90	10.34	10.34	92
	204SR-S30	44	37	54	48	64	58	74	68	85	78	88	82	10.34	10.34	88
	204SR-S40	39	33	49	43	60	54	70	64	80	74	84	78	10.34	10.34	84
	204SR-S50	38	29	48	39	59	50	69	60	79	70	83	74	10.34	10.34	83
	204SR-S60	34	25	44	35	54	45	64	56	75	66	78	69	10.34	10.34	78
	204SR-S70	26	14	36	24	46	34	57	45	67	55	71	59	10.34	10.34	71
205	205SD-S30	147	139	164	156	180	173	197	190	214	207	231	223	8.55	10.34	186
	205SD-S40			159	151	176	168	193	185	209	202	226	219	8.69	10.34	186
	205SD-S50			157	147	174	163	191	180	208	197	225	214	8.76	10.34	186
	205SD-S60			152	142	169	158	186	175	203	192	220	209	8.96	10.34	186
	205SD-S70			143	129	160	146	177	162	194	179	211	196	9.38	10.34	186
	205SR-S10	114	108	137	131	160	154	182	176					9.19	10.34	186
	205SR-S20	105	99	128	122	150	145	173	167					9.60	10.34	186
	205SR-S30	96	82	119	105	141	128	164	150	187	173			9.99	10.34	186
	205SR-S40	86	73	109	95	132	118	154	141	177	163	185	171	10.34	10.34	185
	205SR-S50	84	64	106	87	129	109	151	132	174	154	182	162	10.34	10.34	182
	205SR-S60	74	54	97	77	119	100	142	122	164	145	172	153	10.34	10.34	172
	205SR-S70	57	31	80	53	102	76	125	98	147	121	155	129	10.34	10.34	155
207	207SR-S09	192	181	232	220	271	260	311	299	350	338	363	352	10.34	10.34	364
	207SR-S11	182	164	222	203	261	243	301	282	340	321	353	335	10.34	10.34	353
	207SR-S12	170	154	210	193	249	232	288	272	328	311	341	325	10.34	10.34	341
	207SR-S13	164	142	203	181	242	221	282	260	321	299	335	313	10.34	10.34	335
	207SR-S31	126	98	166	137	205	177	244	216	284	256	297	269	10.34	10.34	297
	207SR-S32	116	81	156	120	195	160	234	199	274	238	287	252	10.34	10.34	287
	207SR-S33	110	69	149	109	188	148	228	187	267	227	281	240	10.34	10.34	281

MAX RATED TORQUE - Actuators should not be sized above their maximum torque rating unless there is no possibility that the valve will resist with a value above that rating.

SIZE:	203	204	205	207	210	212	214	216
N-m:	56	93	186	373	746	1,186	2,373	2,373

OUTPUT TORQUE DATA (CONTINUED)

SPRING RETURN (N-m)		SPRINGS		1.5 bar		2.0 bar		2.5 bar		3.0 bar		3.5 bar		4.0 bar		5.0 bar		5.52 bar	
		START	END	START	END	START	END	START	END	START	END	START	END	START	END	START	END	START	END
210	210SD-S09	66	52	77	63	141	128	206	192	270	257	335	321	400	386	464	450	529	515
	210SD-S11	86	64	65	43	129	107	194	172	258	236	323	301	387	365	452	430	516	494
	210SD-S12	98	79	51	31	115	95	180	160	244	224	309	289	373	353	438	418	502	482
	210SD-S13	112	86	43	17	107	81	172	146	236	210	301	275	365	340	430	404	494	469
	210SD-S31	164	131			63	29	127	94	192	158	256	223	321	287	385	352	450	416
	210SD-S32	185	143			51	9	115	73	180	138	244	202	309	267	373	331	438	396
	210SD-S33	199	150					108	60	172	124	237	189	301	253	366	318	430	382
	210SR-S09	122	97			77	51	120	94	163	138	207	181	250	224	337	311	382	356
	210SR-S11	160	119					98	57	141	100	184	143	228	187	314	273	360	318
	210SR-S12	182	145					71	34	115	78	158	121	201	164	288	251	333	296
	210SR-S13	208	160							100	52	143	96	187	139	273	226	319	271
	210SR-S31	305	242											105	42	191	129	236	174
	210SR-S32	342	264											82	4	169	91	214	136
	210SR-S33	368	279													155	66	200	111
212	212SR-S10	282	189							157	64	214	122	272	179	387	294	447	354
	212SR-S20	300	224							122	45	179	103	237	161	352	276	412	336
	212SR-S30	372	251											210	89	326	204	385	264
	212SR-S40	462	334													243	114	303	174
214	214SD-S20	357	266	111	21	300	210	489	398	678	587	867	776	1,055	965	1,244	1,154	1,433	1,343
	214SD-S30	442	298			268	124	457	313	646	502	835	691	1,024	879	1,213	1,068	1,401	1,257
	214SD-S40	549	397			170	17	359	206	548	395	736	584	925	773	1,114	961	1,303	1,150
	214SR-S10	620	417							345	141	471	267	598	394	852	647	984	779
	214SR-S20	661	494							268	100	394	227	521	354	775	607	907	739
	214SR-S30	819	552									336	68	462	195	716	449	848	581
	214SR-S40	1,017	735													534	251	666	383
216	216SR-S10	1,099	773			369	43	654	328	939	613	1,225	899	1,510	1,184	2,081	1,755	2,378	2,052
	216SR-S20	1,269	991					436	158	722	443	1,007	729	1,293	1,014	1,863	1,585	2,160	1,882
	216SR-S30	1,853	1,413									585	145	870	431	1,441	1,001	1,738	1,298
	216SR-S40	2,373	1,759													1,095	481	1,392	778

Q-SERIES ¼ TURN ACTUATORS

MAX RATED TORQUE - Actuators should not be sized above their maximum torque rating unless there is no possibility that the valve will resist with a value above that rating.

SIZE:	203	204	205	207	210	212	214	216
N-m:	56	93	186	373	746	1,186	2,373	2,373

OUTPUT TORQUE DATA (CONTINUED)

SPRING RETURN (N-m)		6.0 bar		7.0 bar		8.0 bar		9.0 bar		10.0 bar		10.34 bar		MOP bar	MAWP bar	Max Rated Torque N-m
		START	END	START	END	START	END	START	END	START	END	START	END			
210	210SD-S09	593	579	658	644	722	708	787	773	851	837	916	902	8.55	10.34	746
	210SD-S11	581	559	645	623	710	688	775	752	839	817	904	882	8.69	10.34	746
	210SD-S12	567	547	631	611	696	676	760	740	825	805	889	869	8.83	10.34	746
	210SD-S13	559	533	623	598	688	662	752	727	817	791	881	856	8.89	10.34	746
	210SD-S31	514	481	579	545	643	610	708	674	772	739	837	803	9.38	10.34	746
	210SD-S32	502	461	567	525	631	590	696	654	761	719	825	783	9.51	10.34	746
	210SD-S33	495	447	559	511	624	576	688	640	753	705	817	769	9.58	10.34	746
	210SR-S09	423	398	510	484	597	571	684	658					9.72	10.34	746
	210SR-S11	401	360	488	447	575	533	661	620	748	707			9.98	10.34	746
	210SR-S12	375	338	461	424	548	511	635	598	721	685			10.28	10.34	746
	210SR-S13	360	312	447	399	533	486	620	572	707	659	736	689	10.34	10.34	736
	210SR-S31	278	216	365	302	451	389	538	476	625	562	654	592	10.34	10.34	654
	210SR-S32	256	178	342	264	429	351	516	438	603	525	632	554	10.34	10.34	632
	210SR-S33	241	152	328	239	415	326	501	412	588	499	618	529	10.34	10.34	618
212	212SR-S10	503	409	618	525	733	640	849	755	964	870	1,003	909	10.34	10.34	1,003
	212SR-S20	468	391	583	507	698	622	814	737	929	853	968	892	10.34	10.34	968
	212SR-S30	441	319	556	435	671	550	787	665	902	781	941	820	10.34	10.34	942
	212SR-S40	358	230	473	345	589	460	704	575	819	691	858	730	10.34	10.34	859
214	214SD-S20	1,622	1,532	1,811	1,720	2,000	1,909	2,188	2,098	2,377	2,287	2,566	2,476	9.65	10.34	2,373
	214SD-S30	1,590	1,446	1,779	1,635	1,968	1,824	2,157	2,012	2,346	2,201	2,534	2,390	9.72	10.34	2,373
	214SD-S40	1,492	1,339	1,681	1,528	1,869	1,717	2,058	1,905	2,247	2,094	2,436	2,283	10.14	10.34	2,373
	214SR-S10	1,106	901	1,359	1,154	1,613	1,408	1,867	1,661	2,120	1,914	2,207	2,001	10.34	10.34	2,207
	214SR-S20	1,029	861	1,282	1,115	1,536	1,369	1,790	1,622	2,043	1,876	2,130	1,962	10.34	10.34	2,130
	214SR-S30	970	703	1,224	956	1,477	1,210	1,731	1,464	1,985	1,718	2,071	1,804	10.34	10.34	2,071
	214SR-S40	787	505	1,041	759	1,295	1,012	1,549	1,266	1,802	1,520	1,889	1,606	10.34	10.34	1,889
216	216SR-S10													5.51	8.27	2,373
	216SR-S20													5.89	8.27	2,373
	216SR-S30	2,012	1,572											6.63	8.27	2,373
	216SR-S40	1,666	1,052	2,236	1,623									7.24	8.27	2,373

MAX RATED TORQUE - Actuators should not be sized above their maximum torque rating unless there is no possibility that the valve will resist with a value above that rating.

SIZE:	203	204	205	207	210	212	214	216
N-m:	56	93	186	373	746	1,186	2,373	2,373

PARTS DIAGRAM & MATERIALS OF CONSTRUCTION

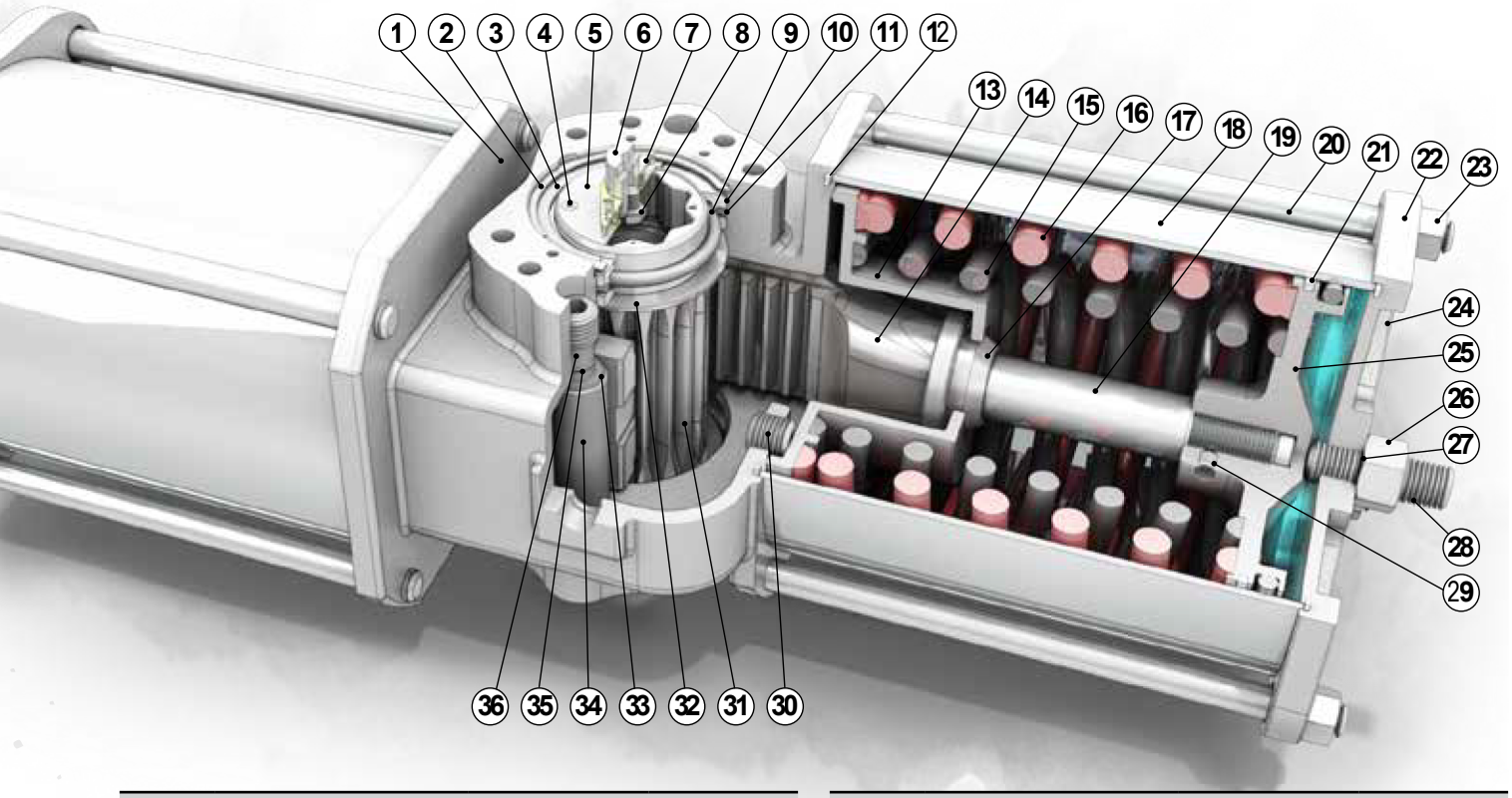

Item No.	Part Description	Material (QS)	Material (QD)
1	Body	CF8M SST	Ductile Iron[4]
2	Shaft Retaining Ring	316 SST	316 SST
3	Shaft Thrust Washer[3]	316 SST	316 SST
4	Top Hat Base Bolt	316 SST	316 SST
5	Top Hat Base	316 SST	316 SST
6	Top Hat	316 SST PM	316 SST PM
7	Top Hat Indicator	Nylon 6/6 GF30	Nylon 6/6 GF30
8	Top Hat Bolt	316 SST	316 SST
9	Shaft O-Ring, Inner	Option[2]	Option[2]
10	Shaft Bushing	Option[2]	Option[2]
11	Shaft O-Ring, Outer	Option[2]	Option[2]
12	Cylinder Seal	PTFE	PTFE
13	Spring Retainer[3]	CF8M SST	Ductile Iron[4]
14	Rack	CF8M SST	CF8M SST
15	Spring, Inner[1]	Chrome Silicon	Chrome Silicon
16	Spring, Outer[1]	Chrome Silicon	Chrome Silicon
17	Safety Collar[5]	316 SST	316 SST
18	Cylinder	316 SST	Black Amalgon

Item No.	Part Description	Material (QS)	Material (QD)
19	Piston Bolt	316 SST	316 SST
20	Tie Rod	316 SST	316 SST
21	Piston Wiper Ring	PTFE	PTFE
22	Piston O-Ring	Option[2]	Option[2]
23	Tie Rod Nut	316 SST	316 SST
24	End Cap	CF8M SST	Ductile Iron[4]
25	Piston	CF8M SST	Ductile Iron
26	Travel Stop Nut	316 SST	316 SST
27	Travel Stop O-Ring	Option[2]	Option[2]
28	Travel Stop A	316 SST	316 SST
29	Piston Set Screw	316 SST	316 SST
30	Travel Stop B	316 SST	316 SST
31	Shaft	CF8M SST	CF8M SST
32	Shaft Shoulder Washer[5]	316 SST	316 SST
33	Saddle Thrust Washer	Bronze	Bronze
34	Saddle Roller	316 SST NIT	316 SST NIT
35	Saddle Pin O-Ring	Option[2]	Option[2]
36	Saddle Pin	316 SST NIT	316 SST NIT

1: Chrome Silicon springs are powder coated. Stainless Steel springs available.
2: "Option" materials depend on trim code, see engineering string.
3: These parts not present on Double Acting models.
4: Ductile iron components are painted to prevent corrosion.
5: Not present on 203, 204, or 205 models.

CF8 stainless steel may be upgraded to 316 or CF8M stainless steel based on availability or materials requirements. Materials shown are standard. Other materials available, contact QTRCO for special options.
Special coatings, plating, or surface treatments are also available

ENGINEERING STRING

For ordering actuators with standard options and trim, specify items 1-8 and 16 as applicable. QTRCO will choose the appropriate trim.

1	2	3	4	5	6	7	8	9	10	11	12	13	14	15	16	17	18
__	_	___	_____	___	___	___	_	__	_	__	__	__	__	__	__	__,_____	___

Model (1)

QSStainless Steel

QDDuctile Iron

Grade (2)

C*Commercial

NNuclear

Size (3)

203
204
205
207
210
212
214

Action (4)

DA*	Double Acting
SD*	Spring Return with 1 additional cylinder to compress springs (usually for low supply pressure applications)
SR*	Spring Return, Fail to 0 or 90 degrees
SY	Spring Return, Fail to 45 degrees
SZ	Spring Return, Fail to other angles
SPa	Spring Return with partial stroke (Xrciser) add-on. Replace 'a' with number of partial stroke positions (standard is 1)
SEa	Spring Return with tandem cylinders to assist spring compression. Replace 'a' with number of tandem pistons (Standard is 1 per spring cylinder)
SPaEb	Spring Return with partial stroke (Xrciser) add-on and tandem cylinders to assist spring compression. Replace 'a' with number of partial stroke positions (standard is 1). Replace 'b' with number of tandem pistons (Standard is 1 per spring cylinder)
DPa	Double Acting with partial stroke (Xrciser) add-on. Replace 'a' with number of partial stroke positions (standard is 1)

PST/SZ Angle (5)

Axx

SP actuators: Angle of travel as measured from the piston fully inward position that valve will be allowed to travel during partial stroke test.

SZ actuators: Angle (from fully CCW position) of fail position for SZ actuator. Example: for an SZ actuator that travels 30deg CW and 60 degrees CCW, this field would be A30

Spring Set (6)

Sxx

Choose spring set based on required torque (N/A for DA and DP models).

Port Size (7)

P00	Custom
P01*	1/4 NPT
P02	3/8 NPT
P03	1/2 NPT
P04	3/4 NPT
P05	1 NPT

Temp Limits

T	Custom Range
Q	-76°F to 310°F
G	-60F to 185F
M*	-20F to 185F
H	-20F to 400F

Spring Material (9)

10	Custom
11*	Chrome Silicon
12	17-7 PH Stainless

Cylinder Material (10)

U	Custom
A*	Amalga
L	Aluminum
C	Carbon Steel
S*	Stainless Steel

Bushings (11)

20	Custom
21*	Acetal[illegible]
22*	Bronze Filled PTFE
23	PEEK
24	Carbon Filled PTFE

Wiper Rings (12)

30	Custom
31*	PTFE
32	UHMWPE
33	PEEK

O-Rings (13)

40	Custom
41	Buna N
42	Viton
43	Silicon
44	EPDM

Cylinder End Seals (14)

50	Custom
51*	PTFE
52	Grafoil

Grease (15)

60	Custom
61*	Standard
62	Food Grade
63	Nuclear Grade

Orientation (16)

LH*	Left Hand. Pistons move outward to turn the valve clockwise. This is commonly called "Fail Closed" for spring return actuators.
RH	Right Hand. Pistons move outward to turn the valve counterclockwise. This is commonly called "Fail Open" for spring return actuators.

Options

Separate multiple options with a comma)

JR	Jackscrew. Handwheel size and material specified separately.
HR	Hydraulic override, cylinders only. Pump and reservoir specified separately.
ETSxx.yy	XX: Travel Adjustment End Cap Side YY: Travel Adjustment Body Side Example: 15.80 (65 degrees total travel): A spring return actuator would fail to a 15 degree position in both LH and RH (fail-open or fail-closed) models, and would stroke with pressure to an 80 degree position (65 degrees total travel). An LH double acting model would stroke clockwise to the 15 degree position, and counter clockwise to the 80 degree position.
TMLOx	Top mounted lockout. Replace x with lock position 1: locks in full clockwise position 2: locks in full counterclockwise position 3: locks in both CW and CCW positions Cyy: locks in a position other than full CW or full CCW. Replace yy with lockout angle as measured from the fully clockwise position.
TMXAyy	Top mounted mechanical partial stroke test device that allows a test in the fully clockwise position. Replace yy with angle of motion to allow (max 30%)
TMXByy	Top mounted mechanical partial stroke test device that allows a test in the fully counterclockwise position. Replace yy with angle of motion to allow (max 30%)

Modifier (18)

3-digit number used by QTRCO to identify further customization. Contact QTRCO for details.

Pressure Equipment Directive (19)

SEP	Actuator will be provided based on SEP with appropriate documentation
PED	Actuator will be provided as fully PED compliant

NOTES:* items are considered standard Ensure material compatibility of all components with applications requirements.(7) Port size limited by actuator size. 203, 204, 205: P03 MAX. 207, 210: P04 MAX. 212, 214: P05 MAX (8) Environmental temperature requirements may limit the use of certain trim materials. Temperature ranges may be extended with proper insulation. Ductile iron units may be used in low temperature (less than -20F), but stroke speed should be limited to prevent brittle fracture.

Allowable temperature on SP units may be limited by selected sensors (specified separately). (9) Standard springs are various grades of spring steel, most commonly chrome silicon, with powder coat. (15) QTRCO selects the appropriate grease based on application requirements. (17) Multiple compatible options may be chosen. Separate options with a comma. (18) This number is assigned by QTRCO for modifications that cannot be defined by the engineering string. Contact QTRCO for details about specific modifiers. (19) Omit if not required.

SAMPLE SPECIFICATIONS	DESCRIPTION
QSCxxxSR-Sxx-P01-M-11-S-21-31-41-51-61-LH	Standard stainless SR actuator with medium temp trim.
QDCxxxDA-P01-G-A-21-31-43-51-61-LH-SEP	Standard ductile iron DA actuator with low temp trim, SEP documentation required.
QDCxxxSR-Sxx-P01-H-11-G-22-31-42-51-61-LH	Standard ductile iron SR actuator with high temp trim.
QSCxxxSD-Sxx-P01-H-11-S-22-31-42-51-61-LH	Standard stainless SD actuator with high temp trim.
QDCxxxSP1-A15-S40-P04-G-11-A-21-31-43-51-61-LH	Ductile iron, 1 position partial stroke at 15degrees, ¾" NPT ports, low temp trim.
QDCxxxDA-P01-H-11-G-22-31-42-51-61-LH-PED	Ductile iron, high temp trim, full PED compliance required.
QSNxxxSR-S20-P01-M-12-S-23-33-44-52-63-RH-JR,TMLO3	Stainless, nuclear grade with medium temp nuclear trim and stainless springs. Right hand (fail open) orientation with lockout that locks in the actuated and failed positions, jackscrew override.
QDCxxxSP1-A15-S40-P04-G-12-S-24-31-43-51-62-LH	Ductile iron, 1 position partial stroke at 15degrees, ¾" NPT ports, low temp trim stainless springs and cylinders, carbon filled PTFE bushings, food grade grease
QSCxxxSE2-S10-P05-C-12-S-24-31-43-51-0-LH-HR,TMXA20-123	Stainless, Spring return with two tandem cylinders, 1inch NPT ports, custom range temperature trim, stainless springs, stainless cylinders, Carbon filled PTFE bushings, PTFE wiper rings, silicon o-rings, PTFE cylinder seals, custom grease, left hand fail, with hydraulic override and TMX manual partial stroke device that strokes 20degrees from clockwise. 123 modifier code defines custom grease, temperature range, and a custom coating requested by customer

THE LEADER IN ACTUATOR

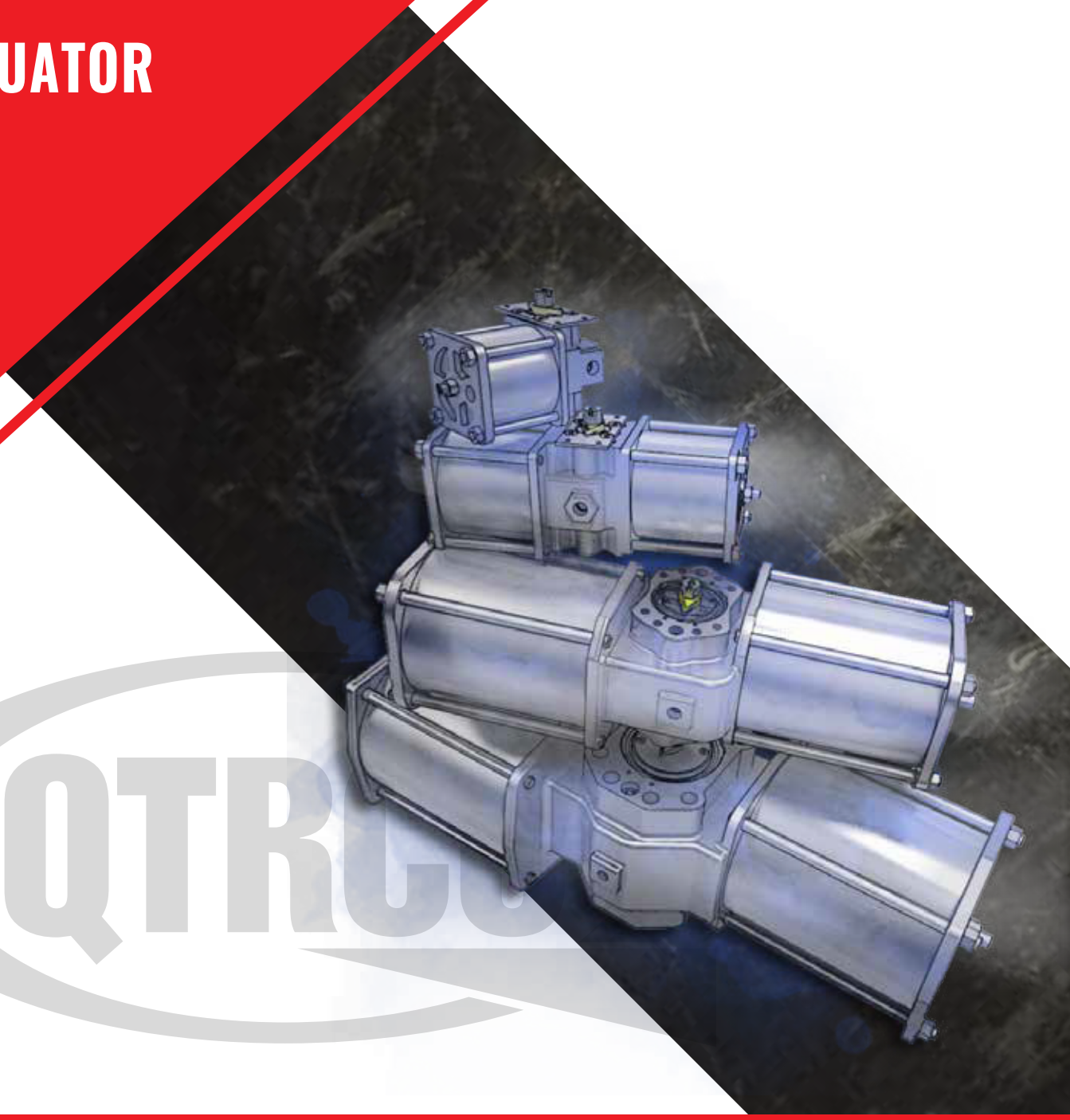

For three years we provide replacement seals free of charge regardless of the number of cycles.

QTRCO

13120 Theis Lane
Tomball, TX 77375
(281) 516-0277

888.ACTU.8.IT
888.228.8848

www.qtrco.com
Email: actu8it@qtrco.com

DCN00717