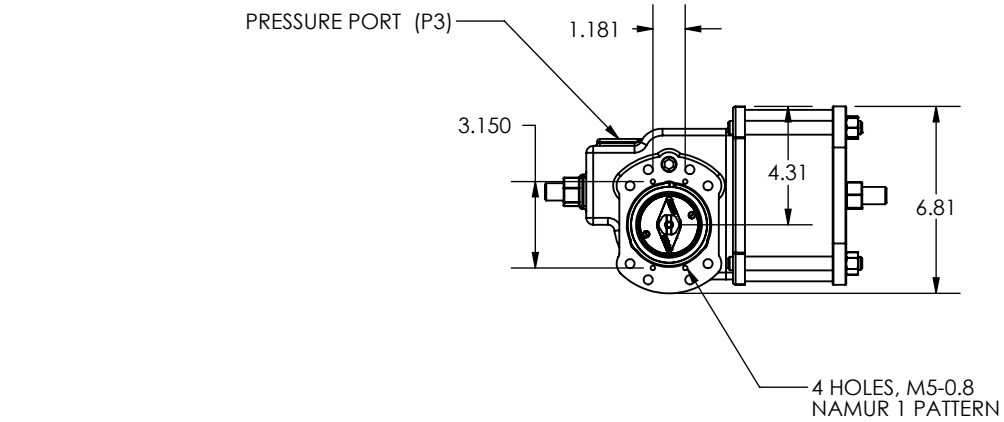

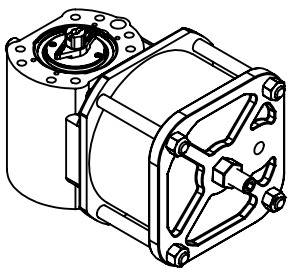

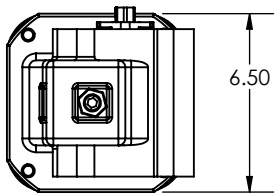

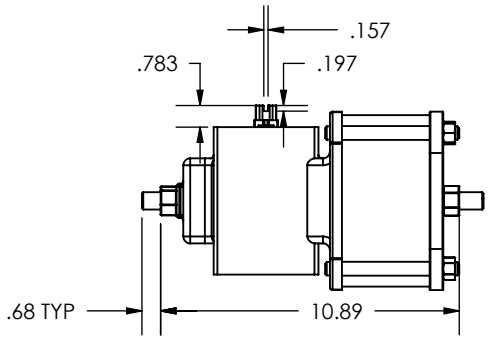

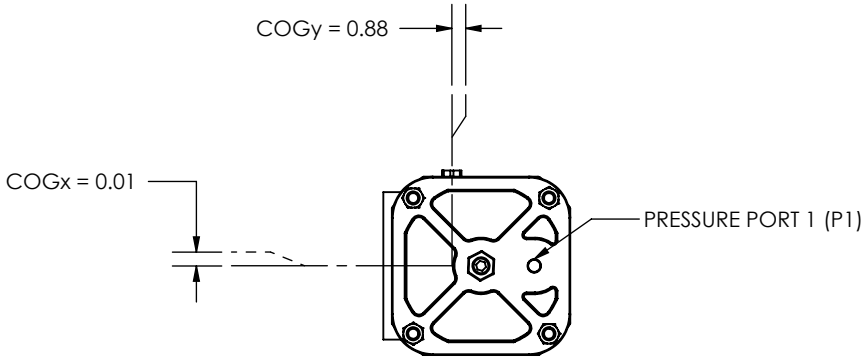

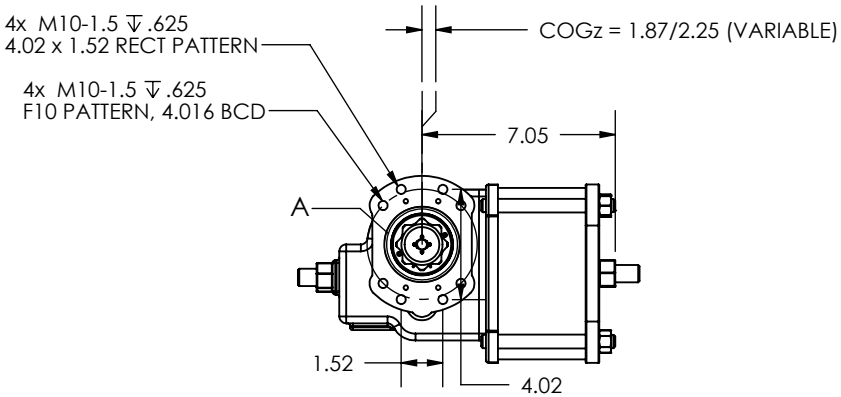

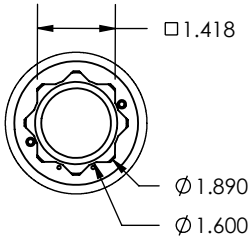

DETAIL A
SCALE 2 : 7

SHOWN WITH NAMUR ACCESSORY DRIVE. IDENTICAL MOUNTING PATTERNS AND SHAFT DRIVE EXIST ON BOTH SIDES, NAMUR ACCESSORIES MAY BE MOVED TO OPPOSITE SIDE.

MOUNTING PATTERNS: F10 AND 4.02x1.52 RECT

SHAFT: 36MM FEMALE DOUBLE SQUARE, 1.000 INCHES DEEP (MEASURED FROM MOUNTING SURFACE)

PORT SIZES AS ORDERED, 1/4 NPT STANDARD

REV.	DESCRIPTION	DATE	DRAWNBY
A	INITIAL	9-JUN-2014	JRH

STATUS: Released

APPROVAL: JRH, 11 Jun 14

DO NOT SCALE DRAWING

PROPRIETARY AND CONFIDENTIAL
THE INFORMATION CONTAINED IN THIS DRAWING IS THE SOLE PROPERTY OF QTRCO, INC. ANY REPRODUCTION IN PART OR AS A WHOLE WITHOUT THE WRITTEN PERMISSION OF QTRCO, INC. IS PROHIBITED.

Except as shown, Dimensions are inches and standard Tolerances are:
Fractional +/- N/A
Angular +/- N/A
1 Decimal +/- N/A
2 Decimal +/- N/A
3 Decimal +/- N/A

MATERIALS AS SPECIFIED BY PRODUCT LINE STANDARDS AND ORDERED OPTIONS. WEIGHT SHOWN WITH HEAVISET MATERIAL OPTIONS.

DESCRIPTION

DWG. NO. **Qx207DA-DIM-01**

REVISION A

WEIGHT (Pounds): 33.398

SHEET 1 OF 1
1 of 1 if not shown

SIZE A

FORMAT DCN00481.02B